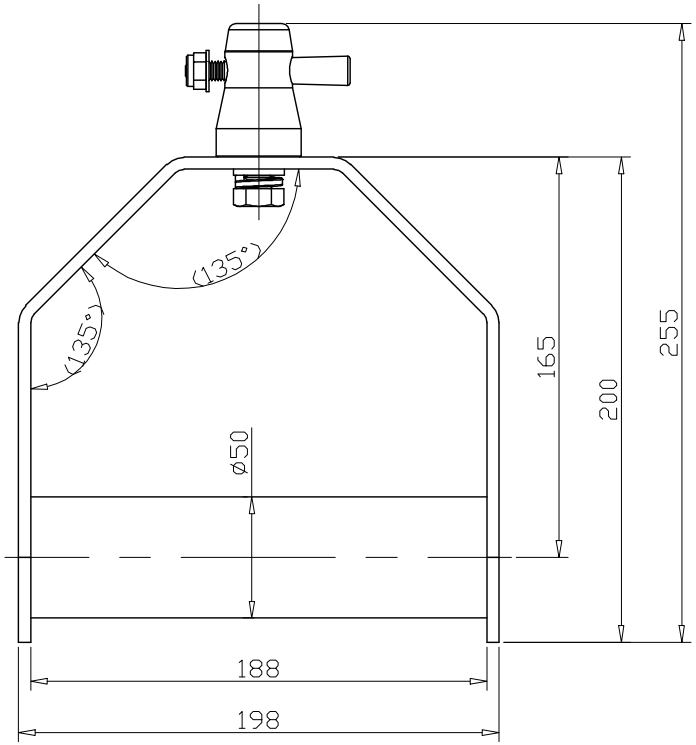

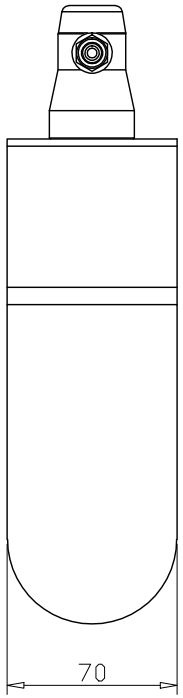

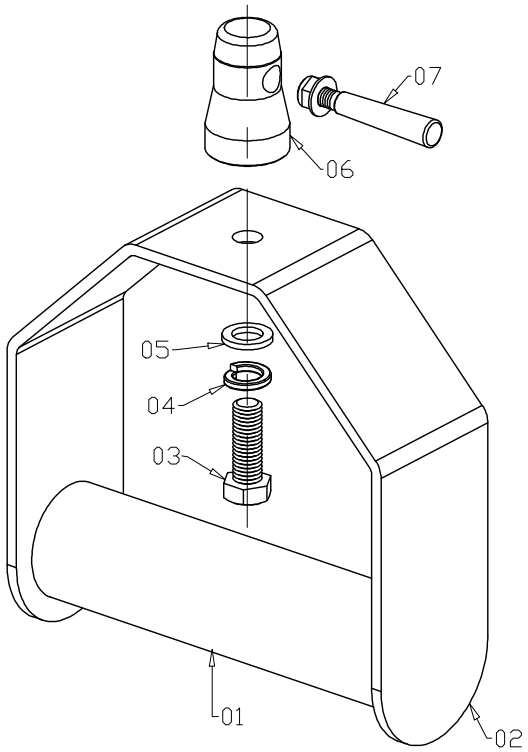

NO.	SPEC.	MATERIAL	FIN.	QTY.
07	ST5005PL	S45C	ZP	1
06	DMS-12-9B	#2011	T6	1
05	ø13*ø24*2.3t	steel	ZP	1
04	ø12.5*ø19*3.4t	steel	ZP	1
03	M12*1.75P*35mm	steel	black	1
02	PJ-LB229	#6061	T6	1
01	ø50*3.0t*188mm	#6082	T6	1

DRAWN	***	DRAW NO	LJJ25		2D/3D	edition	1
Specification	198*70*255mm	DESIGN	luoqin	DATE 15.04.30	CHECKED	APPROVED	
Weight	0.88kgs/pcs	UNITS	mm	Proofread			
SURFACE	RAW	SCALE	1:3				

MARK	NAME	RETRIEVE CONTENTS	DATE

Global Truss